LIMITED SPACE THERMOWELLS

#1	DESCRIPTION
5L	Limited space thermowells - Add a W here for a Brass plug and stainless steel chain attached to well (Example: 5LW)

#2	WELL MATERIAL & PROCESS CONNECTION SIZE
H	304 stainless steel
K	316 stainless steel
M	Inconel 600
X	Other, specify

Standard process connection is 1" NPT. Add a 1 prefix for a 1/2" NPT or a 2 prefix for a 3/4" NPT (Example: 1H = 304 SS with 1/2" NPT process connection) Add an N as a suffix for a NPT Instrument Connection.

#3	OPTIONS
1	Stamped on well (Standard)
X*	Other
M	MTR

Note: Immersion length of a spring-loaded sensor to fit this well is 2-1/2".

5L	M	1

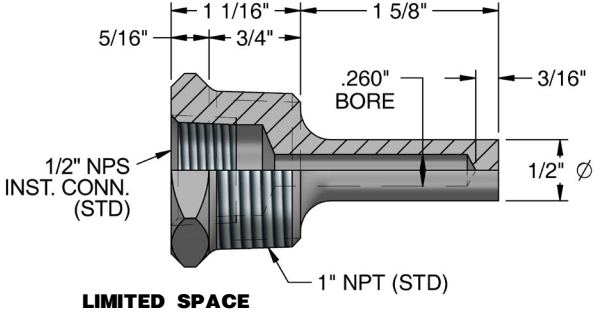

LIMITED SPACE THERMOWELL