3-A CERTIFIED SANITARY CAP THERMOWELLS

#1	DESCRIPTION
5F	Sanitary thermowells - Add "W" here for a plug with a chain attached to well. (Example. 5FW)

#2	STYLE [25-27]						
A	Step shank	F	Fast response straight shank (1/2" Q)	S	Straight shank (3/4" Q)	T	Tapered shank

#3	BORE SIZE & SENSOR CONNECTION Standard is NPSM. See drawing below.		
2	.260" ID	X	Other, specify
3	.385" ID		

Add "N" for FNPT (Example: 2N=FNPT)

Note: Standard (sensor) connections are 1/2" FNPSM (female straight) to match 1/2" MNPT (male tapered)

#4	U (INSERTION) DEPTH [15]
B	2-1/2"
C	4-1/2"
D	6"
E	7-1/2"
U__"	Other, specify

Note: See illustration and sensor length equations below to calculate your mating sensor's Immersion length.

#5	T (LAG) EXTENSION		
T__"	Lag length in inches	Z	No lag

Note: Ingold socket and threaded fittings are readily available. Because of the diversity of sizes, materials and other options, please consult JMS directly.

#6	CAP SIZE						See Tri-Clamp Size Chart on page 4-1
15	1 x 1-1/2	30	3	80	8	X*	Other, specify
20	2	40	4	100	10	Z	N/A
25	2-1/2	60	6	120	12		

#7	CAP STYLE [see 4-9, Row 9 for illustrations]				
T	Tri-Clamp (16 AMP)	P	PV gasket (16APV) w/o 13-H nut	A***	3A4 adapter
B***	Bevel seat w/o 13H nut	PH	PV gasket (16APV) w/ 13-H nut	X*	Other,specify
BH***	Bevel seat w/ 13H nut				
I**	I clamp (16AI-14I)				

#8	MATERIAL		
H	304 SS	L	316L SS
I	304L SS	X	Other, specify
K	316 SS		

#9	POLISH
H	High polish #4 finish (≤ 32 microinches(µin))(Standard)
E	Electropolish after #4 finish (≤ 32 microinches(µin))
P	Passivate after #4 finish (≤ 32 microinches(µin))
F	Fine polish (≤ 20 microinches(µin))
V	Ultra polish 8G finish (≤ 8 microinches(µin))
X	Other, specify

#10	TAGGING OPTIONS
1	Laser etched or stamped on well (Standard)
X	Other
Z	N/A

#11	DOCUMENTATION / CERTIFICATION Choose as many as applicable (Example: "DU" requests dye penetrant test and X-Ray examination)
M	Material Test Report (MTR) for wetted parts
D	Dye penetrant testing
P	Internal hydrostatic pressure test
U	X-Ray examination
W	Premium SwiftyCalc, ASME 19.3TW calculation
S	Surface finish certificate
E	Certificate of electropolish
A	Certificate of no Animal Derived Material (ADM)
N	Certificate of no polishing compounds
O	Certificate of cleaned for oxygen service

www.3-A.org

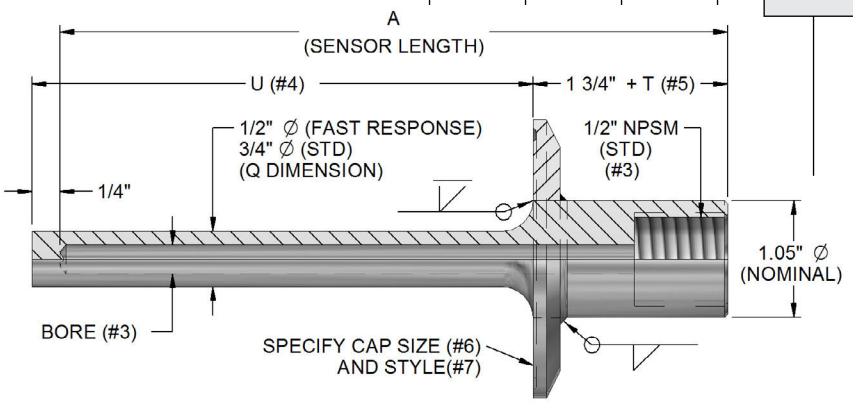

Note:
-Matching sensor length for sensors with a spring-loaded fitting
A = U length(#4) + 1 1/2" + T length(#5)

-Matching sensor length for sensors with a welded fitting
A = U length(#4) + 3/4" + T length(#5)

* When specifying X, ensure that it meets 3-A standard.
** Not 3-A authorized.
*** Must be cleaned manually.

5F	A	2	D	2"	15	T	K	H	1	M